Cush-A-Block®
Rooftop Supports

Submittal Sheets

DSACBN Series

Support With Metal Channel

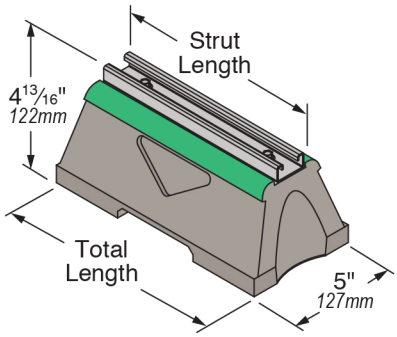

Shown with 13/16" Strut

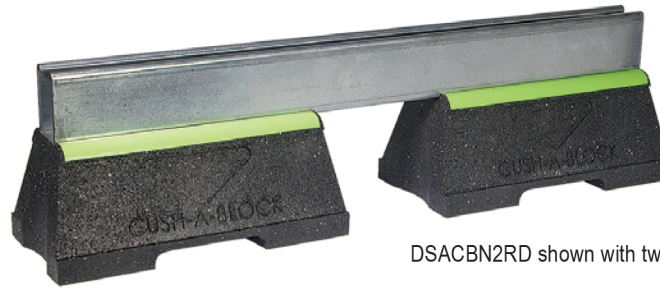

DSACBN2RD shown with two bases

Fittings Specifications		
Material	**ASTM**	**ASTM Description**
Hot Rolled Plate:	A 575	Steel, sheet and strip, carbon drawing quality, special killed, hot rolled.
Fitting (Steel)	A 366	Steel carbon, cold rolled sheet, commercial quality structural steel.
	A 366	
	A 36	
Strip Steel: Pipe Clamps	A 569	Steel, sheet and strip, carbon drawing quality, special killed, hot rolled.
Stainless Steel: **(ST304 or ST316)**	A 240 TYPE 304	Heat resisting chromium and chromium-nickel stainless steel plate, sheet, strip for pressure vessel.
	A 240 TYPE 316	
Aluminum: **(AL)**	B 221	Aluminum alloy extruded bar, rod, wire, shape and tube.

Fitting Finish Specifications		
Finish	**Finish Code**	**Description**
Paint-Green Powder Coating	GR	A dark green low gloss powder coating is applied and thoroughly baked after steel has been cleaned and phosphatized.
Electroplated	EG	Wesanco fittings and hardware supplied as "Electro-Galvanized" in accordance with ASTM B 633.
Mill-Galvanized (Pre-Galvanized)	PG	Galvanized steel used in the manufacture of Wesanco channel sections conforms to ASTM A 653 GR33 G90. Uncoated edges resulted from slitting, punching and channel cut off are present.
Hot Dip Galvanized After Fabrication (HDGAF)	HG	Wesanco channel and fittings which are hot dip galvanized after fabrication conform to one of the following specifications. ASTM A 123, ASTM A153 or ASTM A386.
Special Coatings	PL, GOLD	Other commercially available finishes can be supplied per specification when required to protect applications.

Project Information:		Approval Stamp:
Project:		
Date:	**Phone:**	
Architect / Engineer:		
Contractor:		
Address:		
Notes 1:		

DSACBN Series

Support With Metal Channel

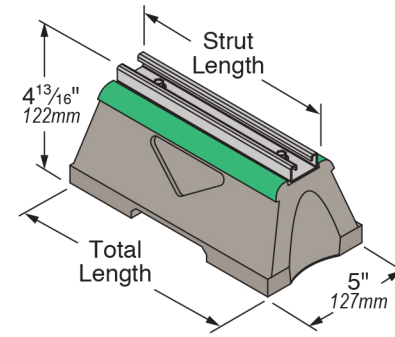

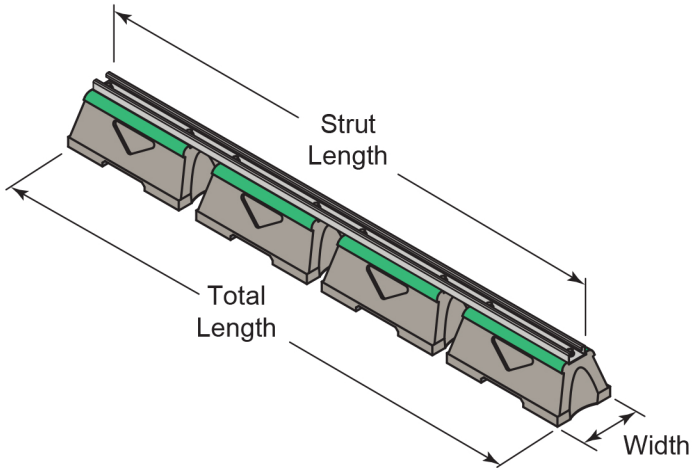

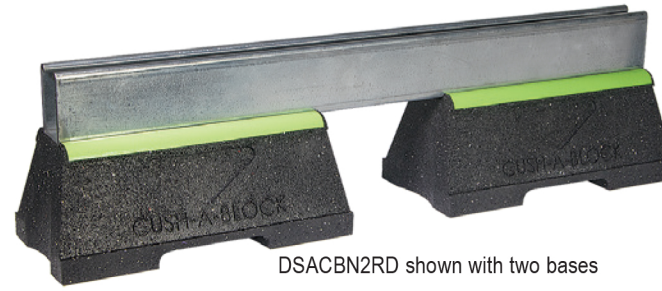

DSACBN2RD shown with two bases

The DSACBN Series provides a longer mounting surface with strut lengths up to 46.82". Custom lengths are available upon request

Part No.	No. of Bases	Height	Strut Length	Total Length	Weight (Lbs)	Uniform Load Capacity (Lbs) *
DSACBN-Support With 13/16" *(21mm)* 14 Gauge Pre-Galv. Steel Channel						
DSACBN1S	1	4-13/16" *(122mm)*	9.32" *(237mm)*	10-1/2" *(267mm)*	4.0 *(1.8Kg)*	2,500 * *(11.12 kN)*
DSACBN2S	2		22.82" *(580mm)*	24" *(610mm)*	8.4 *(3.8Kg)*	5,000 * *(22.24 kN)*
DSACBN3S	3		34.82" *(884mm)*	36" *(914mm)*	12.6 *(5.7Kg)*	7,500 * *(33.36 kN)*
DSACBN4S	4		46.82" *(1.2m)*	48" *(1.2m)*	16.9 *(7.6Kg)*	10,000 * *(44.48 kN)*
DSACBN-Support With 1-5/8" *(41mm)* 12 Gauge Pre-Galv. Steel Channel						
DSACBN1D	1	5-5/8" *(143mm)*	9.32" *(237mm)*	10-1/2" *(267mm)*	4.7 *(2.1Kg)*	2,500 * *(11.12 kN)*
DSACBN2D	2		22.82" *(580mm)*	24" *(610mm)*	9.9 *(4.5Kg)*	5,000 * *(22.24 kN)*
DSACBN3D	3		34.82" *(884mm)*	36" *(914mm)*	15.0 *(6.8Kg)*	7,500 * *(33.36 kN)*
DSACBN4D	4		46.82" *(1.2m)*	48" *(1.2m)*	20.0 *(9.1Kg)*	10,000 * *(44.48 kN)*
DSACBN Support With 2-7/16" *(62mm)* 12 Gauge Pre-Galv. Steel Channel						
DSACBN1RD	1	6-7/16" *(164mm)*	9.32" *(237mm)*	10-1/2" *(267mm)*	5.1 *(2.3Kg)*	2,500 * *(11.12 kN)*
DSACBN2RD	2		22.82" *(580mm)*	24" *(610mm)*	10.9 *(5.0Kg)*	5,000 * *(22.24 kN)*
DSACBN3RD	3		34.82" *(884mm)*	36" *(914mm)*	16.6 *(7.5Kg)*	7,500 * *(33.36 kN)*
DSACBN4RD	4		46.82" *(1.2m)*	48" *(1.2m)*	22.2 *(10.1Kg)*	10,000 * *(44.48 kN)*

* This load is only for the capacity of the components in this assembly.
Please consult roofing manufacturer or engineer for roof load capacity.