Airstrip®

Submittal Sheets

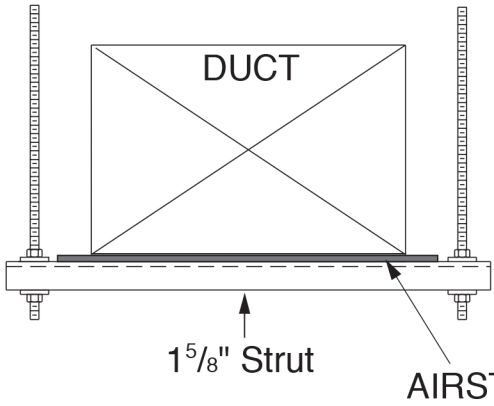

The AIRSTRIP™ is designed to dampen the noise and vibration that can occur between piping or duct work and the supporting channel. Made from 64 Durometer Santoprene, the AIRSTRIP is light weight, dependable, and long-lasting.

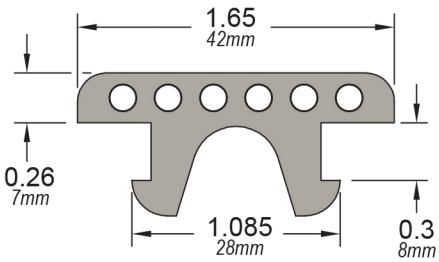

Part No.	Max. Load Lbs. per Lineal In.		Length	
	Lbs.	*(kg/25.4mm)*	Ft.	*(m)*
DSAAS1	40	*18.1*	10	*3.05*

- Temp Range: -40°F to 250°F (-40°C to 121°C)
- Available in 10' *(3m)* lengths
- Santoprene UL94HB rated
- Made in USA

Installs simply by pushing into place

To remove, squeeze the tabs at the end and push up

Project Information:		Approval Stamp:
Project:		
Date:	**Phone:**	
Architect / Engineer:		
Contractor:		
Address:		
Notes 1:		